RC 900 AND RC 600 ROTARY EVAPORATORS. INSPIRINGLY EASY TO USE.

KNF

cloup

BENEFIT FROM EXPERT KNOWLEDGE.

ROTARY EVAPORATION TAILORED TO PRACTICAL NEEDS.

Under the spotlight at KNF: What aspects are really key to rotary evaporation in everyday lab practice? What is needed to guarantee simple, economical and reliable processes day in day out? These are the questions we used to guide us when developing and implementing the RC 900 and the new RC 600. We became involved in daily lab work. We asked lab technicians what they wished for, enlisted experts to perform tests and incorporated their suggestions.
The result? KNF rotary evaporators designed to impress thanks to their distinct handling advantages, clever functional details and well thought out safety features.

What makes KNF's rotary evaporators stand out?
For years we have offered the SC 920 vacuum pump system, a much sought-after laboratory device that works side by side with distilling apparatus. Simple handling, a small footprint and whisper quiet operation are the KNF strengths that set the SC 920 apart.

Its success has encouraged us to broaden our systems approach to create a perfectly balanced package comprising a rotary evaporator, vacuum pump system and chiller. Curious? Then discover KNF's rotary evaporators and their advantages today!

EASY TO USE I CLEVER FUNCTIONAL DETAILS I WELL THOUGHT OUT SAFETY FEATURES

RC 900. SUPERIOR PERFORMANCE SYSTEM.

Rotary evaporator, vacuum pump system and chiller as a perfectly coordinated system.

RC 900 SC 920 C 900

RC 600. DESIGNED FOR ACADEMIA LABS.

System packages to suit different budget conditions are available – e.g. one comprising a vacuum pump system to simultaneously and independently assist two rotary evaporators.

RC 600 SCC 950 RC 600

SUPERIOR PERFORMANCE SYSTEM

RC 900. DISTILLATION MADE SIMPLE.

CLEAR ADVANTAGES FOR USE.

Designed for everyday use, and tailored to practical needs. The RC 900 makes rotary evaporation far simpler and safer. The high-performance system for meeting stringent requirements is impressive thanks to its intuitive handling and valuable functions that provide outstanding support for everyday lab work. Reliability, operational safety and precision come as standard with the RC 900. Safety features add to the advantages that make the system so suitable and indispensable for precise distillation. Moreover the RC 900 operates extremely quietly.

- **Sleek design, minimum footprint**
  The RC 900 takes up very little space and offers maximum ease of use.
- **Whisper quiet for a pleasant working environment**
  The lift and rotation of the RC 900 are virtually silent.
- **Versatile use, simple operation**
  The system offers central remote control for all functions, and operation via touchscreen and control knob.

Cooling condenser is straightforward to detach by turning the clamping nut. The cooling condenser is also extremely easy to clean.

reddot award 2014
winner

Tube guide inside the tower – tidy and safe, with tubes no longer an obstruction.

Uncomplicated flask exchange – flask simply locks into place – and can be done with one hand.

Convenient, fully adjustable **flask angle** set via a control knob.

Relevant parameters for distillation and for the heating bath are easily set by **touching and turning.**

Memory function – simply press the memory button to save the flask's current immersion depth and rotation speed for easy and reliable process repeatability.

Cordless heating bath with diode to indicate heat level and a pour spout for **safe, spill-free emptying.**

„The RC 900 is a high-performance system that is easy to use. Its clever details and automated functions not only significantly ease everyday use, they also guarantee an efficient and safe operation.

Dr. Alexander Scherer, Chair of Organic Chemistry, Friedrich-Alexander-Universität Erlangen-Nürnberg, Germany

EVAPORATION AS A PRECISELY TUNED SYSTEM

RC 900, SC 920 AND C 900.

SUCCESSFULLY COMBINED.

Joining forces to create a precisely balanced system, we present the RC 900 rotary evaporator combined with the SC 920 vacuum pump system and the C 900 chiller, which together form an effective, efficient system.

C 900 CHILLER

- Operating temperature range -10 to +40 ºC, cooling capacity 250 W.
- Compact design, small footprint.
- Splash-proof membrane keypad.
- Easy to fill.

SC 920 VACUUM PUMP SYSTEM

- Flow rate 1.2 m³/h, ultimate vacuum 2 mbar abs.
- Automatic, precise recognition and control of boiling point.
- Pleasantly quiet operation.

HANDLING ADVANTAGES

RC 900 AND RC 600.

EASE OF USE, DESIGNED TO INSPIRE YOU EVERY DAY .

FLASK EXCHANGE | QUICK, EASY AND RELIABLE

Flasks can be exchanged quickly and easily:

- Push flask into retainer until the fastening clip is heard locking into place – that's all there is to it.
- To release, lift the fastening clip and remove the flask.
- Safety catch prevents the flask slipping accidentally during removal.
- The memory function saves the current immersion depth and rotation speed, enabling flasks to be changed quickly, easily and reliably during an iterative process.

FLASK ANGLE | FULLY ADJUSTABLE AND PRECISE

Different flask sizes require adjustable pivoting to ensure the flask is properly immersed in the water or oil bath.

- With the RC 900, the optimum position can be set with ease using a fully adjustable control knob.

COOLING CONDENSER | HIGH-PERFORMANCE AND EASY TO CLEAN

The cooling condenser performance is impressive thanks to its optimized coil design.

- Condensate collection is fast and efficient.
- Simply unscrew a clamping nut to detach the condenser for cleaning.
- Large opening of the condenser greatly facilitates cleaning.
- Dry ice cold finger available as accessory.

The RC 900's remote control shows all relevant parameter settings in a single operating level.

The optional protective cover is hinged, making for easy flask accessibility.

ALL-AROUND PROTECTION

RC 900 AND RC 600.

ELABORATED SAFETY FEATURES.

PROTECTIVE COVER | COMPREHENSIVE SAFETY WHEN NEEDED

The safety guard completely covers the heating bath. It is therefore the accessory of choice when ultimate safety is required.

- Simply place it on the rim of the heating bath and tighten three locking screws to secure.
- Electronic monitoring of the protective cover; if the heating bath is turned on when the protective cover is open, a warning sound is emitted.
- Easy access to flask thanks to hinged designed.

HEATING BATH | SAFE FOR THE USER AND THE PROCESS

The cordless heating bath offers safety and ease of use.

- Vertical double wall for the safe transportation of filled heating baths without spillages.
- Pour spout for safe emptying.
- Diode to indicate heat level.
- Mounted on the guide rail, the horizontal position of the heating bath can easily be adjusted to suit different flask sizes.
- Fill guide makes it easier to feed in the specific quantities of water or oil required for each flask size.

REMOTE CONTROL OF THE RC 900 | CENTRAL AND SECURE

The remote control allows the RC 900 to be operated safely even from outside closed fume hoods.

- All functions including heating bath can be centrally controlled.
- Ergonomically advantageous placement for glare-free input of parameters.

FOR INTENSIVE DAY-TO-DAY USE

RC 600. DESIGNED FOR ACADEMIA LABS.

RELIABLE DAILY PERFORMANCE.

Pure rotary evaporation. The RC 600 has been specifically developed to meet the needs and demands of university and education facilities. A constant turnover of students calls for robust laboratory devices that are quickly understood. They must be designed to withstand continuous intensive use while unfailingly meeting the unique safety requirements of training labs.

High-performance system component. The RC 600 is an impressive, compact rotary evaporator that performs particularly space-saving distillation when combined with KNF's SCC 950 vacuum pump system. Equipped with two controllers, the SCC 950 is able to provide different vacuum conditions to two rotary evaporators at the same time.

- **Fit for purpose:** all functions operated centrally via membrane keypad providing exceptional ease of use.
- **Comprehensively robust:** device design and details were especially developed for intensive use.
- **Safe and compact:** cordless heating bath with pour spout, fixed tube guide, easy flask exchange – typical hazards eliminated thanks to well thought out solutions.

RELIABLE SAFETY

RC 600. PURE ROTARY EVAPORATION.

A VERSATILE SYSTEM COMPONENT.

Set for flexibility: Several system packages to suit different budget conditions are available consisting of rotary evaporator, vacuum supply and chiller.

VACUUM PUMP SYSTEM SCC 950
- Flow rate 3 m³/h, ultimate vacuum 2 mbar abs.
- Equipped with 2 controllers.
- Automatic, accurate recognition and monitoring of the boiling point using the integrated ramp function.
- Pleasantly quiet operation.

VACUUM PUMP SYSTEM SC 920
- Flow rate 1,2 m³/h, ultimate vacuum 2 mbar abs.
- Automatic, accurate recognition and monitoring of the boiling point using the integrated ramp function.
- Pleasantly quiet operation.

VACUUM CONTROL UNIT VC 900
- Control of the vacuum application.
- Separate control unit with pressure sensors and two-step controlled valve to be placed independently from the operating unit.

DIAPHRAGM VACUUM PUMP N 920 G
- Flow rate 1,26 m³/h, ultimate vacuum 2 mbar abs.
- High suction speed, particularly in the low vacuum range.
- Integrated gas ballast valve.

C 900 CHILLER
- Operating temperature range -10 to +40 ºC, cooling capacity 250 W
- Compact design, small footprint.
- Splash-proof membrane keypad.
- Easy to fill.

DUAL EVAPORATION

RC 600 SCC 950 RC 600

TURNKEY EVAPORATION

C 900 SC 920 RC 600

SMART EVAPORATION

C 900 N 920 G VC 900 RC 600

- **Safety as standard** – coated cooling condenser.
- **Cooling condenser is straightforward to detach** by turning the clamping nut. The cooling condenser is also extremely easy to clean.
- **Uncomplicated flask exchange** – flask simply locks into place – and can be done with one hand.
- **Operating unit** – all functions operated centrally via a membrane keypad providing exeptional ease of use.
- **Memory function** – simply press the memory button to save the flask's current immersion depth and rotation speed for easy and reliable process repeatability.
- **Cordless heating bath** with a diode to indicate heat level and a pour spout for safe, spill-free emptying.
- Control knob to adjust set points for **heating bath temperature** and **flask rotation speed**.
- **Fixed tube guide.**

RC 900.

TECHNICAL DATA AND ACCESSORIES.

TECHNICAL DATA	
Heating bath	
Heating bath temperature [°C]	20 – 180
Coolant supply parameters (chilled condenser)	
Permissible pressure [bar]	3
Permissible temperature	-15 °C to +20 °C
Coolant-coated surface [cm²]	1230
Parameters of evaporation flask	
Size of evaporation flask	50 – 3000 ml
Rotational speed of evaporation flask [1/min]	25 – 250
Length of stroke [mm]	150
Lifting speed [mm/s]	38
RC 900	
Dimensions W x D x H [mm]: - without glass (footprint) - with glass	 431 x 447 x 464 487 x 447 x 823
Remote control unit	
Wireless range	approx. 50 m without obstacles

ACCESSORIES	
Description	**ID**
Protective cover for heating bath	127204
Refill valve	300639
Coolant valve	300853
Vacuum seal	113046
Dry ice cold finger	301696

DIMENSIONS

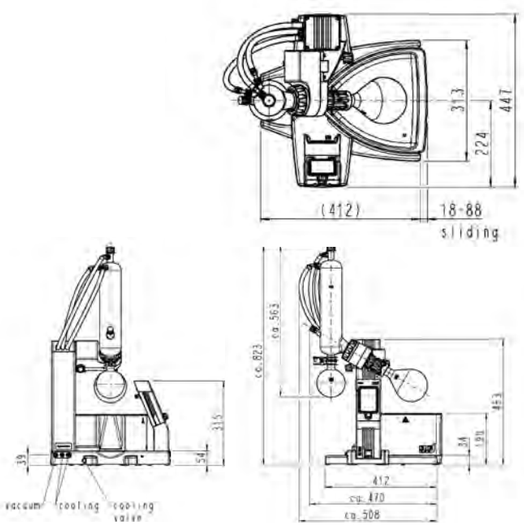

RC 600.

TECHNICAL DATA AND ACCESSORIES.

TECHNICAL DATA	
Heating bath	
Heating bath temperature [°C]	20 - 180
Coolant supply parameters (chilled condenser)	
Permissible pressure [bar]	3
Permissible temperature	-15 °C to +20 °C
Coolant-coated surface [cm²]	1230
Parameters of evaporation flask	
Size of evaporation flask	50 – 3000 ml
Rotational speed of evaporation flask [1/min]	25 – 250
Length of stroke [mm]	150
Lifting speed [mm/s]	38
RC 600	
Dimensions W x D x H [mm]: - without glass (footprint) - with glass	 431 x 453 x 464 487 x 453 x 823
Operating unit	
Type of display	LCD black/white
Indicated parameters	Rotation speed, temperature, lift

ACCESSORIES	
Description	**ID**
Protective cover for heating bath	127204
Refill valve	300639
Vacuum seal	113046
Dry ice cold finger	301696

DIMENSIONS

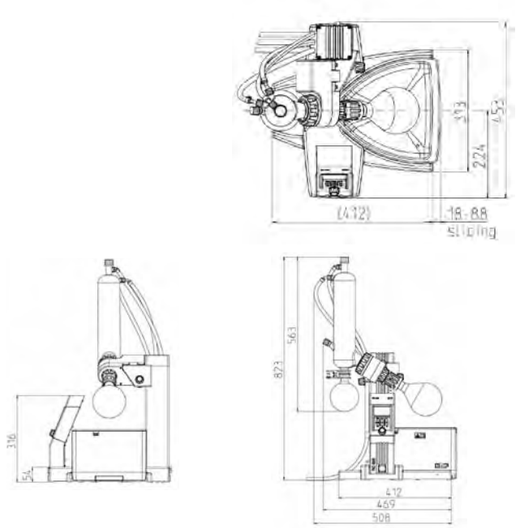

Votre revendeur :

cloup
42 à 48 Bd de Polangis - BP 260
94502 Champigny-sur-Marne - Cedex
☏ 01 48 83 21 76 - 🖷 01 48 83 51 01
info@cloup.fr www.cloup.fr

NF reserves the right to make technical changes without notice. KNF 06/2015. Printed in Germany.